WARRANTY

Arlec guarantees this product in accordance with the Australian Consumer Law.

Arlec also warrants to the original first purchaser of this product ("you") from a retailer that this product will be free of defects in materials and workmanship for a period of 12 months from the date of purchase; provided the product is not used other than for the purpose, or in a manner not within the scope of the recommendations and limitations, specified by Arlec, is new and not damaged at the time of purchase, has not been subjected to abuse, misuse, neglect or damage, has not been modified or repaired without the approval of Arlec and has not been used for commercial purposes ("Warranty").

If you wish to claim on the Warranty, you must, at your own expense, return the product, and provide proof of original purchase and your name, address and telephone number, to Arlec at the address below or the retailer from whom you originally purchased the product within 12 months from the date of purchase.

Arlec will (or authorise the retailer to) assess any claim you may make on the Warranty in the above manner and if, in Arlec's reasonable opinion, the Warranty applies, Arlec will at its own option and expense (or authorise the retailer to) replace the product with the same or similar product or repair the product and return it to you or refund the price you paid for the product. Arlec will bear its own expenses of doing those things, and you must bear any other expenses of claiming on the Warranty.

The Warranty is in addition to other rights and remedies you may have under a law in relation to the product to which the Warranty relates.

Our goods come with guarantees that cannot be excluded under the Australian Consumer Law.

You are entitled to a replacement or refund for a major failure and for compensation for any other reasonably foreseeable loss or damage. You are also entitled to have the goods repaired or replaced if the goods fail to be of acceptable quality and the failure does not amount to a major failure.

Arlec Australia Pty. Ltd. ACN 009 322 105 ("Arlec") gives the Warranty.
Arlec's telephone number, address and email address are:

CUSTOMER SERVICE: (03) 9982 5111

Building 3, 31 – 41 Joseph Street, Blackburn North, Victoria, 3130
Blackburn North LPO, P.O. Box 1065, Blackburn North, 3130
Email: custservice@arlec.com.au

CPIN002563

Installation Instructions

ARLEC

10

BATTERY OPERATED SWIVEL HEAD LIGHT

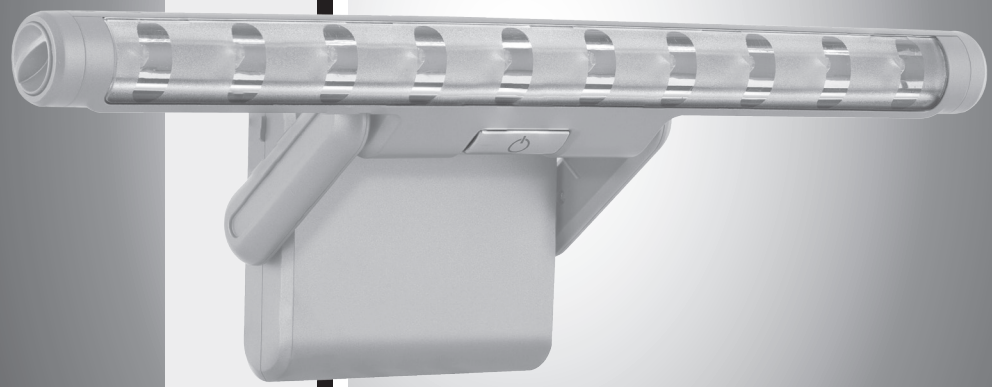

DIY

UC0135

IMPORTANT!

Please read these instructions carefully.

Due to continuous research and development the specifications in here are subject to change without notice.

FEATURES

- 10 Superbright LED's.
- Dual Light Levels.
- 180° Swivel function.
- Ideal for undercabinet lighting, bedrooms, kitchens, basements, attics and wardrobes.
- Easy installation using rear mounting bracket for wall or undercabinet mounting.
- Requires only 3 x AA batteries for operation.
- No bulbs to replace.

INSTALLATION

Mounting bracket is attached to the rear of the light. Simply fix 2 screws into mounting surface then slide the mounting bracket over screws to lock into position.

BATTERY INSTALLATION

Slide to detach light from mounting screws. Remove 4 screws securing battery compartment cover. Insert 3 x AA batteries with polarity as marked. Carefully replace cover and re-mount light. See Figure 1.

Figure 1.

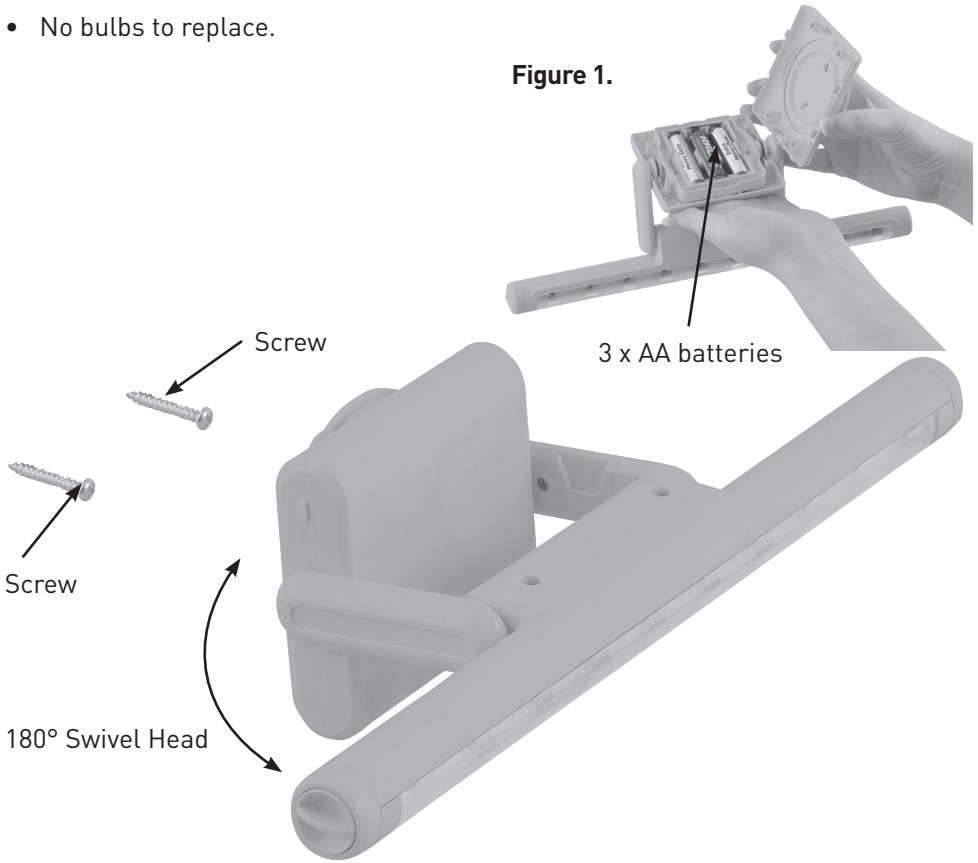

OPERATING INSTRUCTIONS

The push button switch allows 3 stage operation.

First depression of switch produces high level light.

Second depression of switch produces low level light.

Third depression of switch turns off light.

SAFETY INFORMATION

- This product is designed for indoor use only.
- Not for use in wet or damp locations.
- Batteries may leak harmful liquids or ignitable materials or explode causing injury or damage.
- Do not mix old and new or any battery types.
- Replace all batteries at the same time.
- Replace fully discharged batteries immediately.
- Remove batteries if light is unlikely to be unused for extended periods.

CARE AND CLEANING

- Switch off before cleaning.
- Clean the exterior with a damp cloth, then wipe dry.
- Do not use abrasive cleansers or solvents.