ARLEC

MAL656 (Series 2)

Compact Security Floodlight

Power Point Plug-In

Installation and Operation Instructions

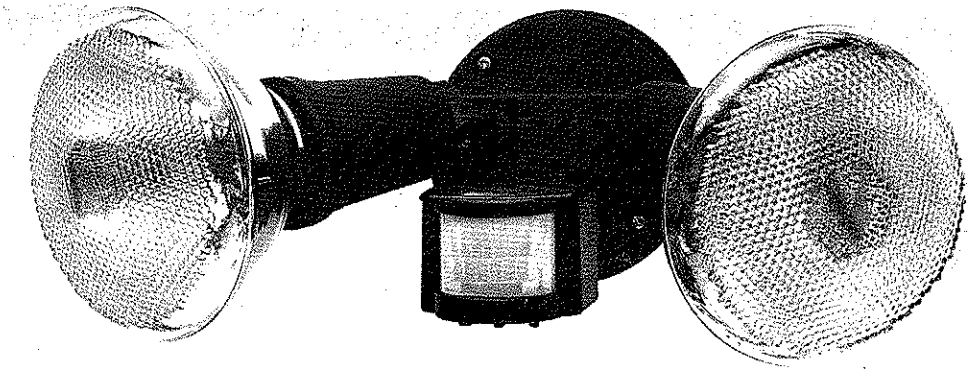

Introduction

The Arlec MAL656 Movement Activated Sensor Light is a compact sensor light unit for "Do-It Yourself" Installation. this unit incorporates two PAR38, 150W spotlight bulbs for wide area illumination. The MAL656 can be used to provide lighting for security and general purposes in a variety of locations around the home or workplace.

Overview

1. Extension arm with elbow joint
2. Mounting box
3. Connecting cord with mains plug
4. 2 x lamp holders
5. Passive infrared sensor
6. Lock nuts x 3
7. 2 x masonry plugs%
8. 2 x mounting screws
9. 2 x PAR38 150W lamps
10. 2 x rubber weather seals

Fig. 1

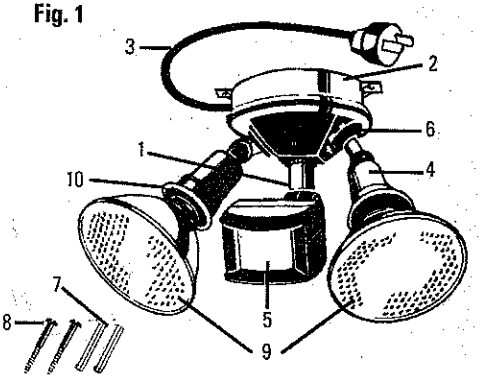

Important! Please read these instructions carefully.

Location of unit

To achieve best results for exterior use, your Movement Activated Floodlight should be securely mounted to a wall or eaves in close proximity (max 4m) to an existing 3 pin power outlet. For ideal operation the sensor head should be located approx 2.5m above the area where movement is to be sensed. This will provide the best scanning sensitivity and detection area.

NOTE: Always avoid locating your Movement Activated sensor light within close proximity to fluorescent lighting or ceiling fans on the same electrical circuit. RFI interference may cause the Floodlight to switch ON inadvertently.

Fig. 2

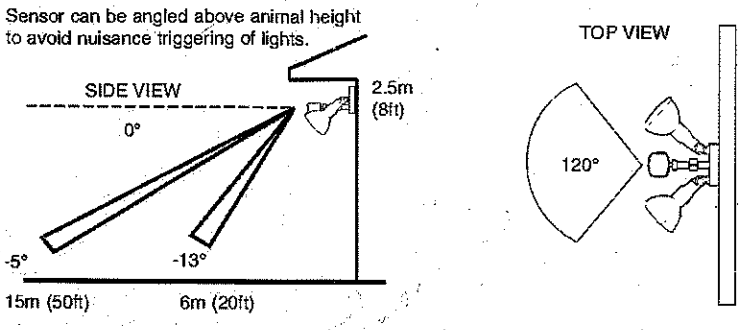

- The Floodlight has a weatherproof rating of IP44, but to avoid severe wind and rain it is preferable to mount in a sheltered location such as under an eave.
- Sensor should be directed slightly downwards and not at the sun.
- To avoid false operation of floodlight, do not aim the sensor at heat sources such as BBQ's, air conditioners, flue vents, street traffic etc.
- Do not aim sensor towards reflective surfaces such as smooth white walls or swimming pools.
- The scanning specification of the sensor (15m at 120°) may vary depending on mounting height and location and the detection range may vary with temperature.
- Movement across the beam is more effective than movement directly towards or away from the beam. (Refer Fig. 3).

IMPORTANT: Loosen all lock nuts and screws on sensor and lamp holders before making any adjustments.

Fig. 3

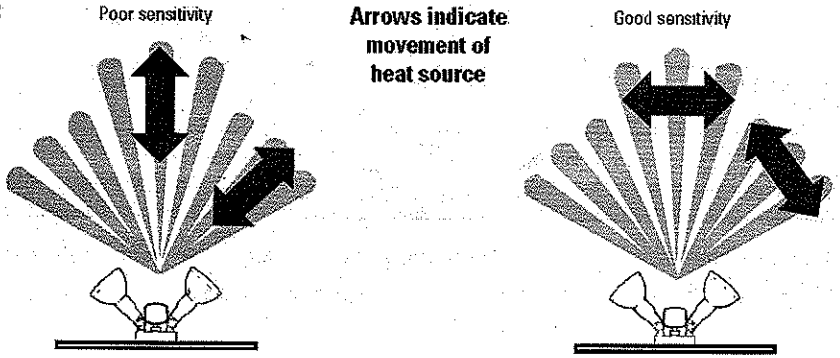

Fig. 4

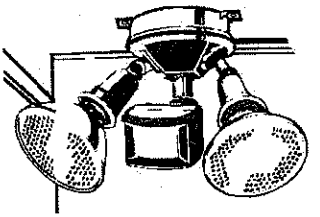

UNDER EAVE MOUNTED

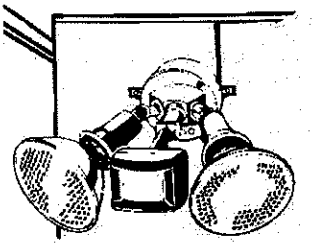

WALL MOUNTED

NOTE: Always face control knobs on sensor downwards to ensure correct operation

Installation

The Arlec DIY Movement Activated Sensor Light can be installed mounted on a wall or under eaves. Use screws and wall plugs provided (if necessary) or spring toggle screws (not supplied) for eave mounting.

To mount:

1. Ensure that power to current light fitting is disconnected and bulb is removed.
2. Select mounting position within reach of a 3 pin power outlet.
3. Hold unit in place and mark screw locations
4. Bore screw holes, ensuring that holes are correct size for screw or wall plug
5. Fit unit using screws. Do not over tighten screws. Ensure that unit is secure.
6. Fit rubber weather seals.
7. Insert 2 x PAR38 150W globes (not supplied) into fittings on Sensor Light and tighten.
8. Connect plug to power outlet.

IMPORTANT: When mounting unit, ensure that supply cord is held securely away from globes using cable clips (not supplied).

IMPORTANT: Be careful of electrical shock. Always remember that the lights may not switch ON during daylight or the lights may be in the automatic OFF mode. Never touch live areas unless power plug of this unit is removed or circuit breaker is in OFF position at the switchboard main.

Understanding the controls

Time - *Time "ON" adjustment*

The time "ON" control adjusts the time that the lights will remain on after the unit has sensed movement. To increase time, turn the knob clockwise. To decrease, turn knob anti-clockwise.

Lux - *Light level adjustment*

The "Lux" control adjusts at what level of light the unit starts sensing at dusk. This control can be also used for testing the unit during daylight hours. To test unit, or operate during the day, turn control knob all the way anti-clockwise. Once unit has been tested the "Lux" control should be set to approx half way, and adjusted later if required.

Sens - *Sensitivity adjustment*

The Sensitivity control adjusts the level of sensitivity of the infrared Sensor. This controls the amount of movement that is required to switch the lights on. With the knob set to minimum (anti-clockwise), the unit will only detect large amounts of movement. It is recommended that in most situations the unit be operated with the "Sens" control set to half.

Setting the controls

1. Turn the "LUX" or light control to minimum, turn the wall switch ON and wait for half a minute for the control circuit to stabilise. At this stage ensure that the time control is set to "minimum". The Floodlights will now switch on and remain on for about 10 seconds.
2. Turn the "SENS" control to minimum.
3. Direct the sensor toward the desired area to be scanned by adjusting the elbow joint and ball joint on the sensor arm. Loosen lock nuts and screws before attempting to adjust sensor arms.

Fig. 5

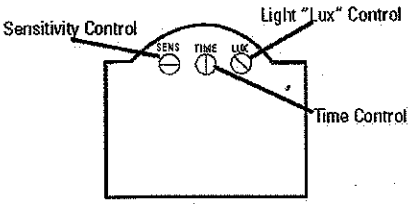

Fig. 6

NOTE: Always tilt sensor unit head below horizontal for weatherproofing.

4. Have another person move across the centre of the area to be scanned and slowly adjust the "SENS" control toward maximum until the unit senses the presence of the moving person, causing the Floodlights to switch on.
5. Adjust time control to required setting.
6. To set the light level at which the Floodlight automatically switches "ON" at night, turn the "LUX" or light control from minimum to maximum. If the Floodlight is required to switch on earlier, e.g. dusk, simply wait for the desired light level, then slowly turn the "LUX" or light control towards minimum while someone walks across the centre of the area to be detected. When the Floodlight switches "ON" release the "LUX" or light control knob. You may need to make further adjustments to achieve your ideal light level setting.

IMPORTANT: When adjusting lamp holders, ensure that PAR38 lamps are not touching or in close proximity to sensing unit or connecting lead. Heat from the PAR38 lamps may distort the sensor unit or damage the lead. Allow 40mm minimum between sensor and PAR38 lamps.

Fig. 7

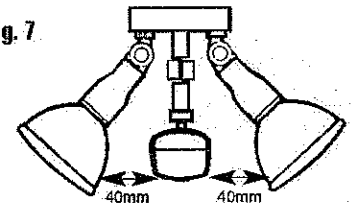

Manual Operation (Automatic Override)

To override the automatic mode, the light must be switched ON in the "Automatic" mode. Now switch your wall switch OFF and back ON within two seconds. Your Floodlight will now stay on continuously, just like a normal light. This override function can be selected during daytime or night time.

To return your Floodlight to the "Automatic" mode, switch your wall switch OFF for at least ten seconds, then switch it on again. To switch your Floodlight off completely, switch your wall switch OFF.

Automatic Mode

Turn your wall switch OFF for at least five seconds and then turn the wall switch back ON. This will put the Floodlight into "Automatic" mode. The unit will then start sensing after dusk. The Floodlights will switch ON and automatically switch OFF after the pre-set time elapses and then only operate again when heat movement is detected.

TROUBLE SHOOTING AND USER HINTS

PROBLEM	POSSIBLE CAUSE	SUGGESTED REMEDY
Light does not switch ON when there is movement in the detection area.	1. No mains voltage.	Check all connections, and fuses/switches.
	2. Globe(s) faulty or missing.	Check. Replace.
	3. Nearby lighting is too bright.	Redirect sensor or relocate unit.
	4. Controls set incorrectly.	Readjust sensor angle and/or sensitivity.
	5. Sensor positioned in wrong direction.	Redirect sensor and/or sensitivity.
Light switches ON for no apparent reason.	1. Heat from globe activating sensor.	Adjust lamp holders to allow a minimum gap of 40mm between PAR38 globe and sensor head.
	2. Heat sources such as aircon. vents, heater flues, barbecues, other outside lighting, moving cars are activating sensor.	Adjust direction of sensor head away from these sources.
	3. Animals/birds e.g. possums or domestic animals.	Probably unavoidable but redirecting sensor may help
	4. Interference from on/off switching of electric fans or lights on the same circuit as your Floodlight. (This problem does not always occur but a faulty switch or noisy fluorescent light may cause the Floodlight to switch on).	Should the false triggering become troublesome, consider: (A) Replacing a faulty switch. (B) Replacing noisy fluorescent tubes and/or starters. (C) Connecting the Floodlight to a separate circuit. (In most cases where one or more of the above suggestions have been carried out, false triggering has been reduced.)
	5. Reflection from swimming pool or reflective surface.	Redirect sensor.
	6. Interference from power surges, mobile phones, CB's, Taxis, etc.	try reducing sensitivity.
Light remains ON.	1. Wall switch is in override "ON" mode.	Switch light OFF for at least 10 seconds, then return to ON position.
	2. Time adjustment is set too long.	Reduce time by turning ON TIME control anticlockwise.
Lights switch ON during daylight hours.	LUX control set too low.	Turn LUX level control clockwise.
When setting controls in daylight, the detection distance becomes shorter.	Interference by sunlight.	Re-test at night.

NOTE: All passive infrared detectors are more sensitive in cold weather than warm weather and more sensitive at night than daytime.

Specifications

Detection Range	15 metres at 120° scan
Time Adjustment	5 seconds to 3 minutes (approx.)
Detection Circuitry	Passive controlled infra red motion sensor
Power Required	230-240 volt, 50Hz, 4 watt consumption (sensor head only)
Maximum Load	2 x 150 watt PAR38
Weatherproof Rating	IP44

Maintenance

To avoid dust build-up and ensure proper functioning of the Arlec Floodlight wipe the sensor lens lightly with a damp cloth every 3 months. Do not use solvents or abrasive cleaners on any part of your Floodlight.

Arlec Guarantee

Arlec guarantees this product against defects of materials and workmanship for a period of 1 year from the date of purchase provided that the product is used in accordance with Arlec's recommendations and within such voltage and current limits as are specified by Arlec in relation to the product. Arlec will at its own option make good, replace with the same or similar product, or provide credit for any product manufactured or supplied by it, which proves to be defective within the limits set out above provided that no repairs, alterations or modifications to the product have been undertaken or attempted, other than by the company or its authorised agents. Should the purchaser wish to make a claim under the guarantee, the product should be returned pre-paid to the place of purchase. This guarantee is in addition to and does not take away from any rights available to the consumer under the Trade Practices Act and the State consumer protection legislation.

Proof of Purchase

Please retain your purchase receipt for all warranty claims.

ARLEC

For all Sales enquiries
Phone (03) 9727 8860 Fax 1300 350 650

© This instruction leaflet is subject to copyright and must not be reproduced, copied or otherwise used in any way or for any purpose without the consent in writing of the owner, Arlec Australia limited (A.C.N. 003 118 787).